Corps of Engineers Hydro Optimization in the Pacific Northwest

Presentation for:

Southwestern Federal Hydropower Conference
Kansas City, Missouri
16 June 2011

By
Charlie Allen
Hydroelectric Design Center
US Army Corps of Engineers

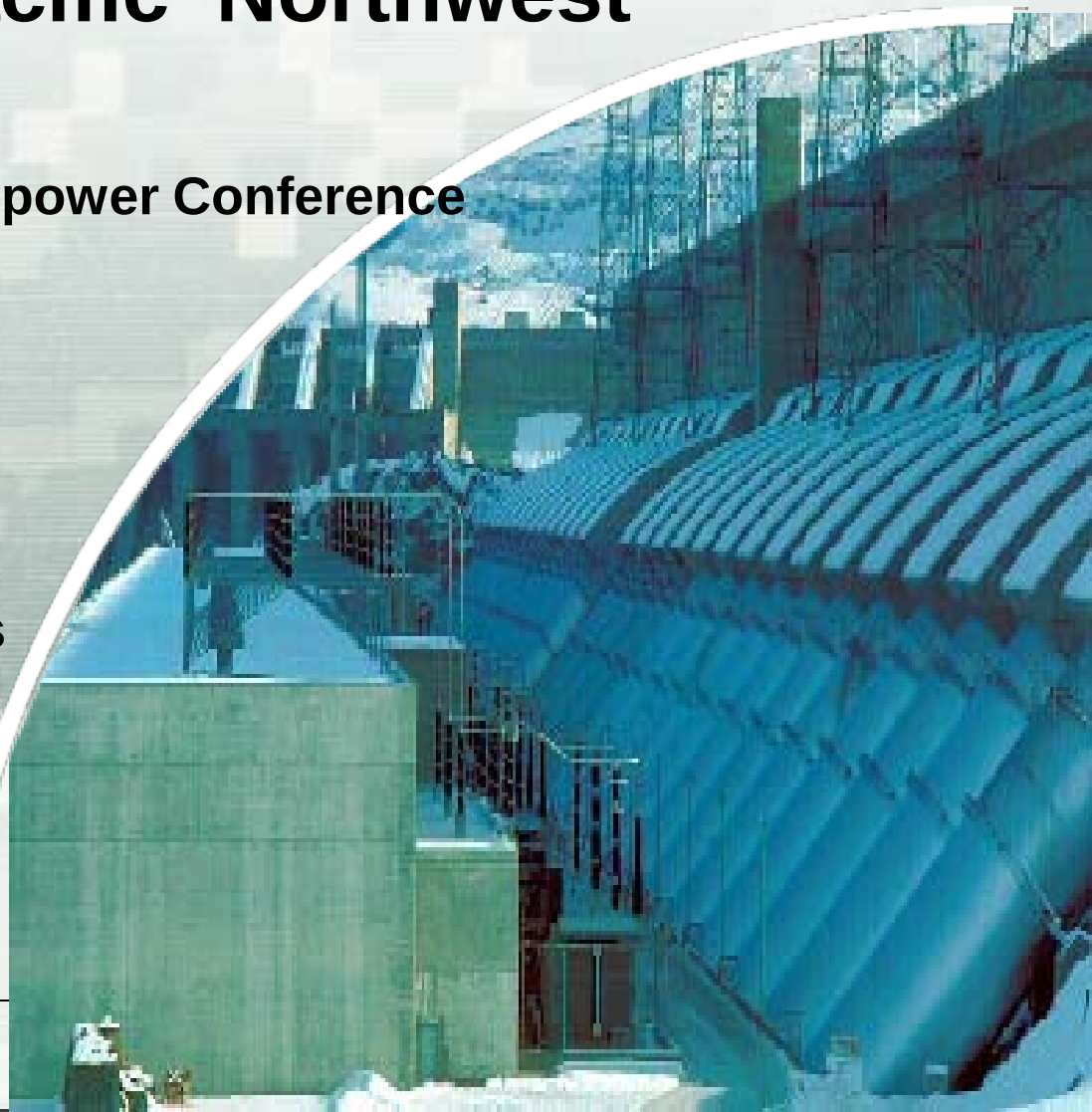

PRESENTATION OUTLINE

- HOT INTRODUCTION AND HISTORY
- TYPE I (Unit) OPTIMIZATION
  - Cam Curve Verification
  - 3-D Cam Controllers
  - Inputs and Telemetry
  - Gate-Blade Optimizer
- TYPE II (Powerhouse) OPTIMIZATION
  - Economic Dispatch
  - Unit Commitment
  - Absolute Flow Measurement
  - Benefits Summary
- QUESTIONS

Hydropower Optimization Team (HOT)

HOT is joint effort between BPA, COE, and BOR to maximize use of available water for hydropower generation

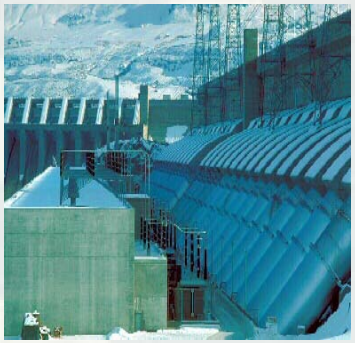

HOT History

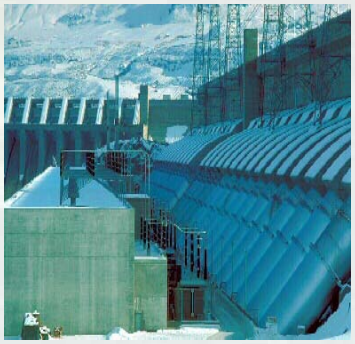

- Early 1990's, BPA purchasing energy on the open market
- A push to 'get more from existing assets'
- HOT created circa 1997
  - Chartered to propose and implement ways to 'get more'
- Reports to the Joint Operating Committee

HOT Structure

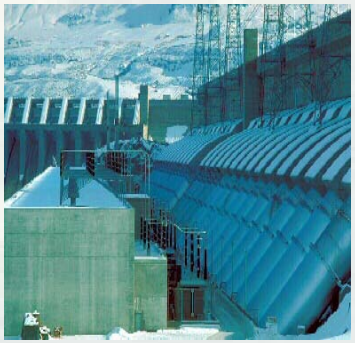

- MEMBERS
  - BPA Project Managers
  - COE Project Managers from 3 Districts (Portland, Seattle, Walla Walla)
  - Hydroelectric Design Center (Engineering)
  - Representative(s) from each Powerhouse
- DECISION PROCESS
  - By Consensus
  - Anyone can suggest an investigation / program

Location of COE projects

Northwest Division

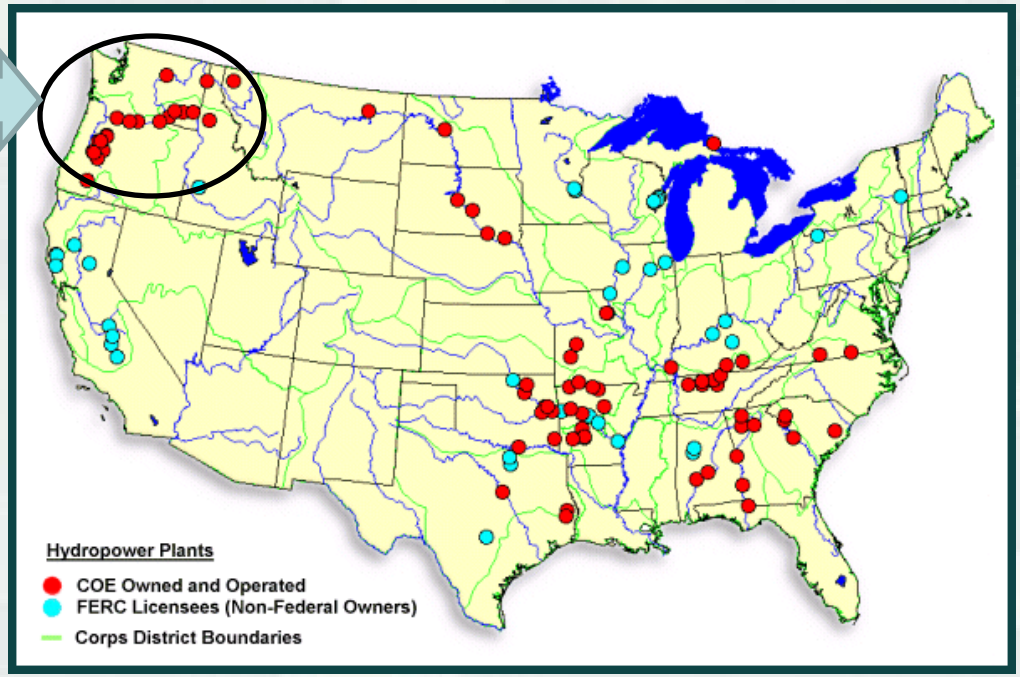

Within NWD, HOT efforts have been primarily at plants located on Columbia and Snake Rivers:

- **10 major hydropower plants in 3 Districts**
- **121 generating units (94 Kaplan & 27 Francis)**
- **Generators ranging from 43 MW to 135 MW**
- **Total rated generating capacity of 11,600 MW**

HOT Programs

- TYPE I (Unit) OPTIMIZATION
  - Cam Curve Verification
  - 3-D Cam Controllers
  - Inputs and Telemetry
  - Gate-Blade Optimizer
- TYPE II (Powerhouse) OPTIMIZATION
  - Economic Dispatch
  - Unit Commitment
  - Absolute Flow Measurement

Cam Curve Verification

- Confirm that the installed Kaplan Cams are correct
- Performed on 8 Plants
- 94 Units
- 14 Index tests
- 10 Different Unit Designs (A ‘Family’)
- Started 1998; Finished 2004

Index Testing – Kaplan Units

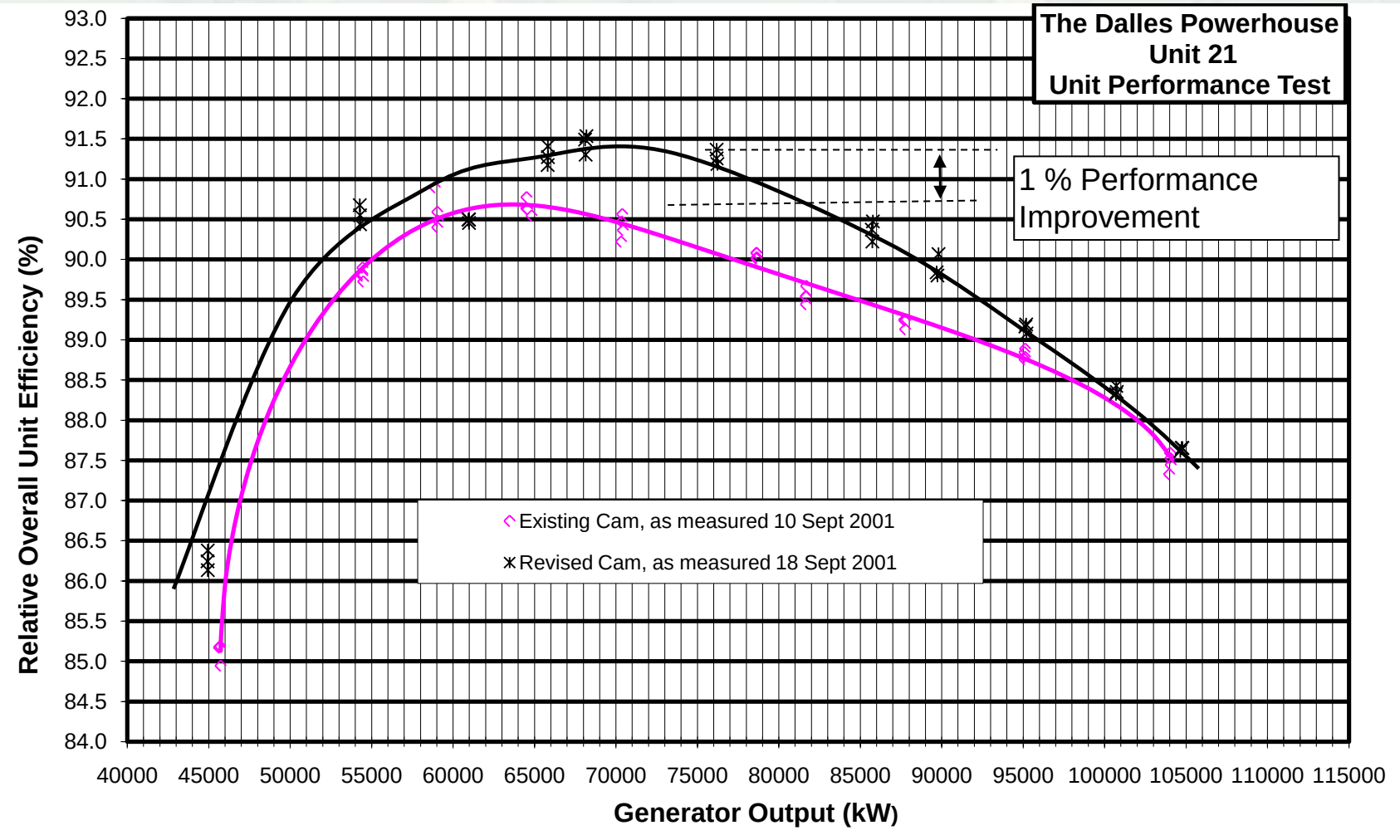

Cam Curve Verification (2)

- Findings
  - Cam Curve Correction averaged approximately 2%
  - Some Head measurements off by 3% (not typical).

HOT Programs

- TYPE I (Unit) OPTIMIZATION
  - Cam Curve Verification
  - 3-D Cam Controllers
  - Inputs and Telemetry
  - Gate-Blade Optimizer
- TYPE II (Powerhouse) OPTIMIZATION
  - Economic Dispatch
  - Unit Commitment
  - Absolute Flow Measurement
  - Partial Implementation at Chief Joseph

3D Cam Controller Improvements

- Mechanical Governors (installed 1950s -1980s)
  - Blade position follows gate position

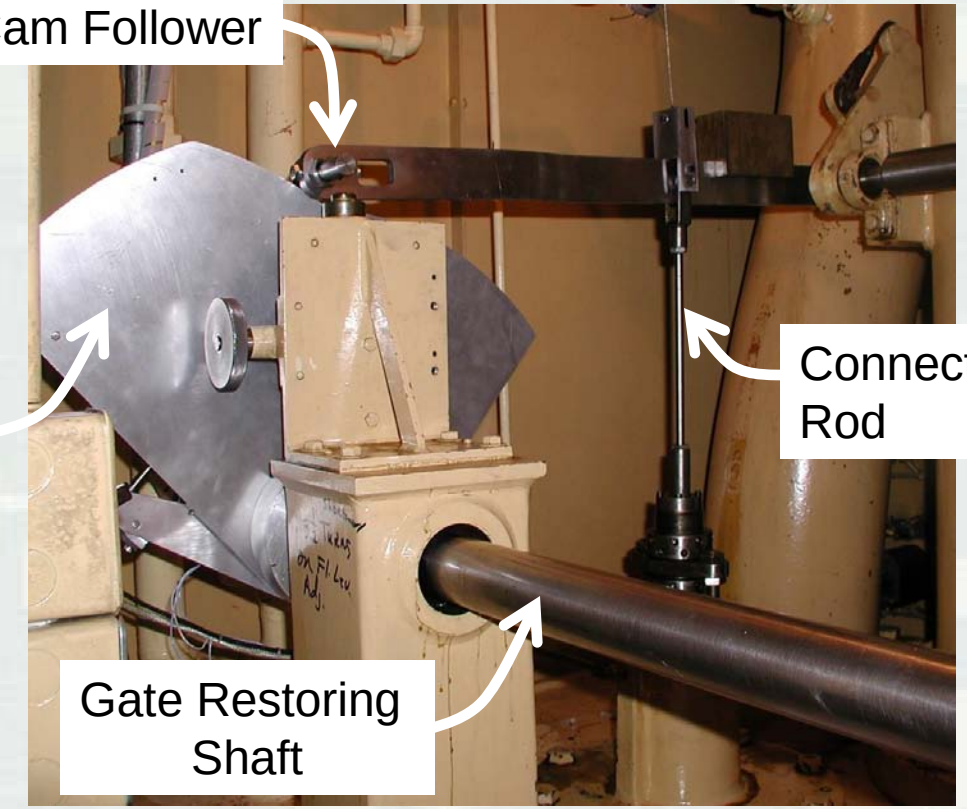

  - Blade position based on shape of hard cam (cam plate)
  - Hard cam valid only for single head

3D Cam Controller Improvements

- Add-on retrofitted to existing Mechanical Governors
  - Originally installed late ‘80s - early 90’s.
  - Newer version installed 2001 to 2004 (HOT initiative).
  - Stepper Motor used to rotate cam plate
  - Stepper Motor driven by cam tables loaded into a separate computer: Position a function of Head and Gate Opening
  - Same functionality as a Digital Governor

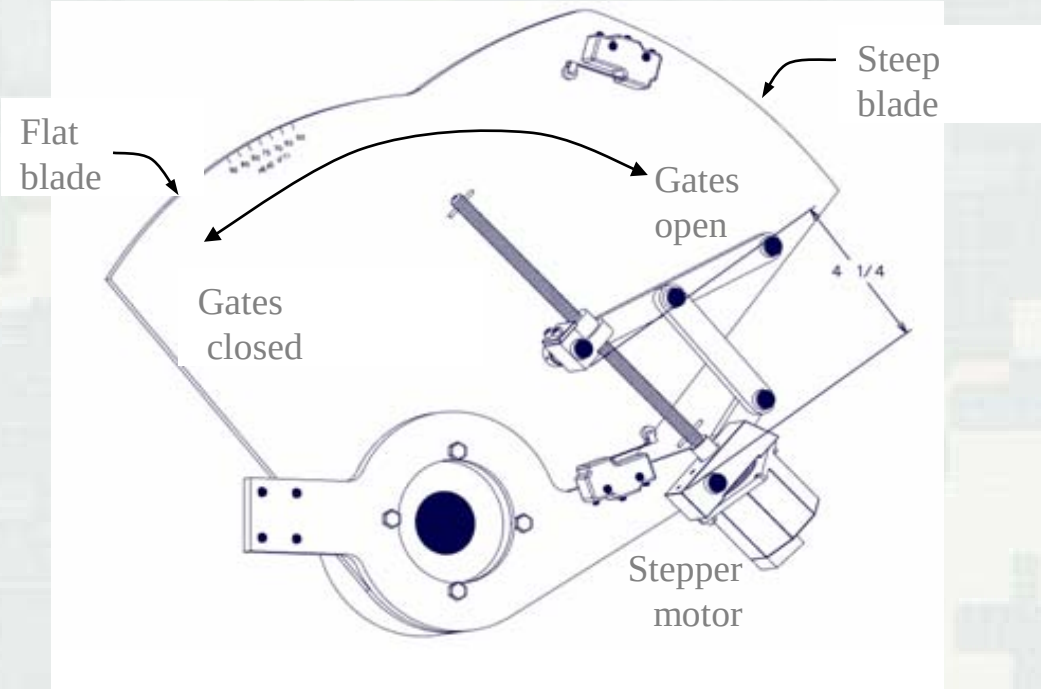

HOT Programs

- TYPE I (Unit) OPTIMIZATION
  - Cam Curve Verification
  - 3-D Cam Controllers
  - Inputs and Telemetry
  - Gate-Blade Optimizer
- TYPE II (Powerhouse) OPTIMIZATION
  - Economic Dispatch
  - Unit Commitment
  - Absolute Flow Measurement
  - Partial Implementation at Chief Joseph

Inputs and Telemetry

The Problem

- Only One head measurement per powerhouse: does not capture variation across powerhouse.
- Only one gate position feedback—not configured to provide electronic information
- Blade Position Feedback: coarse, lots of vibration.
- Lack of redundancy throughout system

Improved Telemetry

- Individual Unit Head Sensing

- Replaces plant gauges --- typically located @ one end of plant
- Builds redundancy in system

Improved Telemetry

- Rotary encoders for blade position and wicket gate position feedback
- 3 Per unit, redundancy
- Digital feed to 3–D Cam controllers

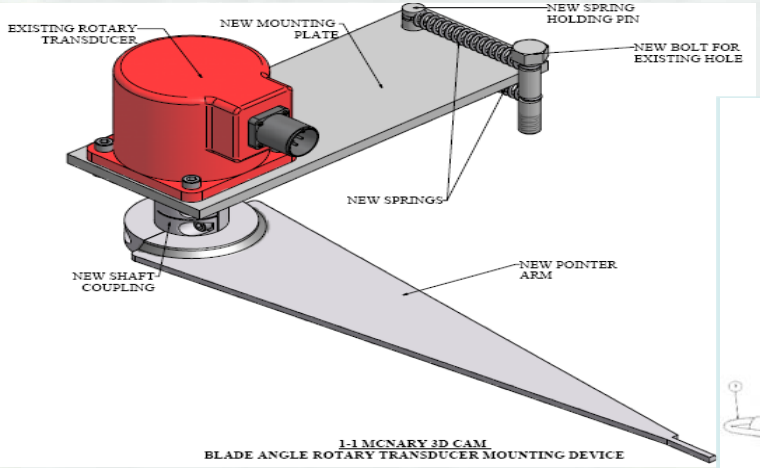

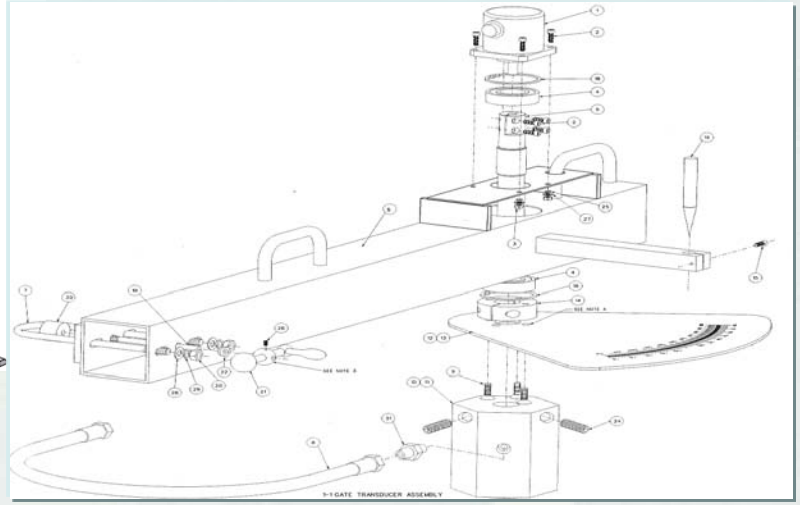

Improved Telemetry

Blade Position Feedback

- New Rotary encoders
- New Mounting arrangement
- Located at top of unit above oil head
- Removed blade position feedback rod

HOT Programs

- TYPE I (Unit) OPTIMIZATION
  - Cam Curve Verification
  - 3-D Cam Controllers
  - Inputs and Telemetry
  - Gate-Blade Optimizer
- TYPE II (Powerhouse) OPTIMIZATION
  - Economic Dispatch
  - Unit Commitment
  - Absolute Flow Measurement
  - Partial Implementation at Chief Joseph

Index Testing – Kaplan Units

▪ The Situation

- At each plant, testing limited to single unit from each turbine family
- Turbine performance results/ cam table considered representative for turbine family

▪ The Problem

- Differences exist between turbines of same family, individual unit performance curves needed
- Index testing labor intensive, testing 97 individual units not easily accomplished / not inexpensive task

GBO Approach

- Develop individual unit performance information in cost effective method
- Gate/Blade Optimizer (GBO) is smart data acquisition device intended to operate in an unattended, automated fashion
  - Continuous monitoring of unit operation for steady state conditions
  - Introduces blade angles variations (deviations from cam table)
- Collects data for follow on, off-line evaluation (not self-optimization)

GBO

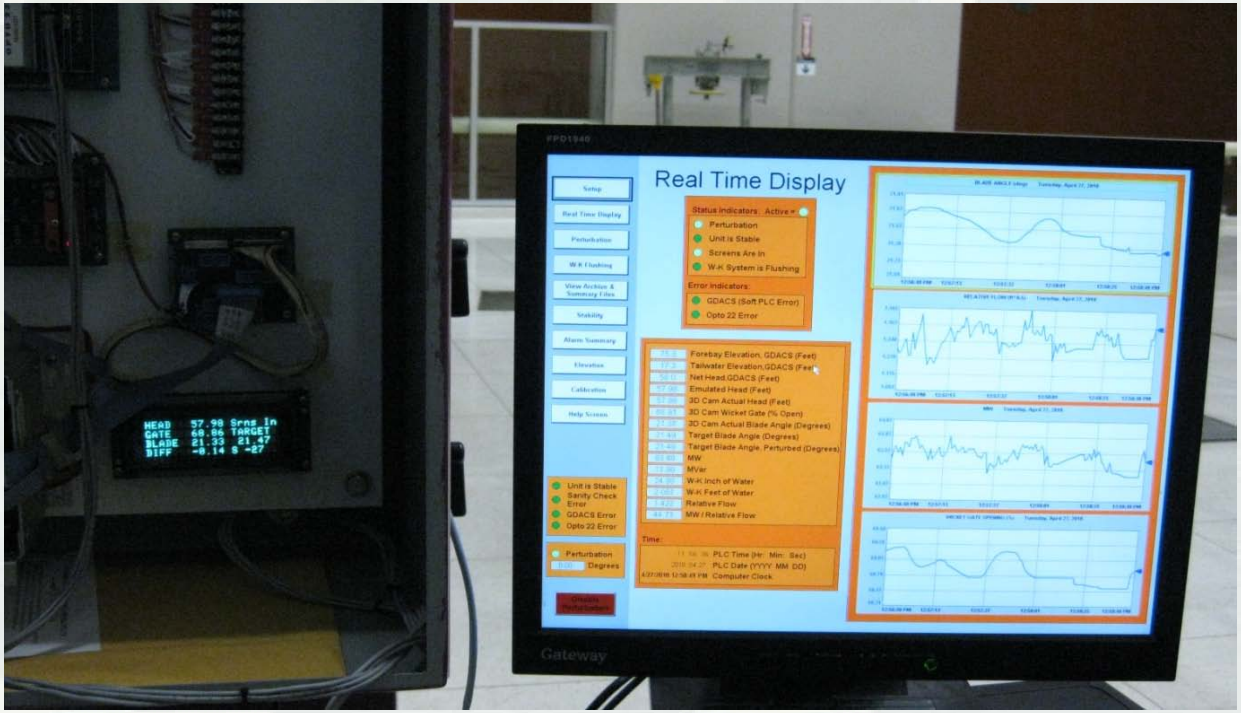

- Data collection underway
- Estimate 3-4 years for new cam tables for 97 individual units expected to be in-place

HOT Programs

- TYPE I (Unit) OPTIMIZATION
  - Cam Curve Verification
  - 3-D Cam Controllers
  - Inputs and Telemetry
  - Gate-Blade Optimizer
- TYPE II (Powerhouse) OPTIMIZATION
  - Economic Dispatch
  - Unit Commitment
  - Absolute Flow Measurement
  - Partial Implementation at Chief Joseph

Plant Optimization Type 2 (T2)

- COE developed software that is part of the SCADA system
  - Suggestive tool for powerplant operator use
  - Unit commitment (which units to place on-line) and Economic Dispatch (where to load units)
  - Coordinated with Utility dispatch request and generation forecast

Type 2 Optimization

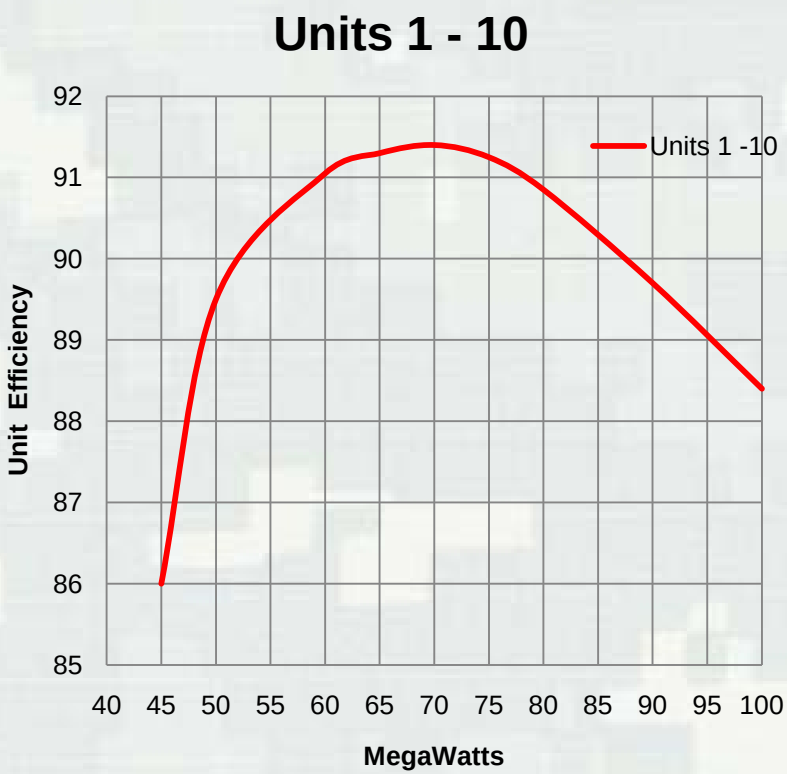

Challenge: Most Efficient Configuration to supply 300 MW

3 X 100

4 X 75

3 X 70 + 1 X 90

5 X 60

Choices influenced by :

Need for spinning reserve

Expected load in near future

It Gets More Complex

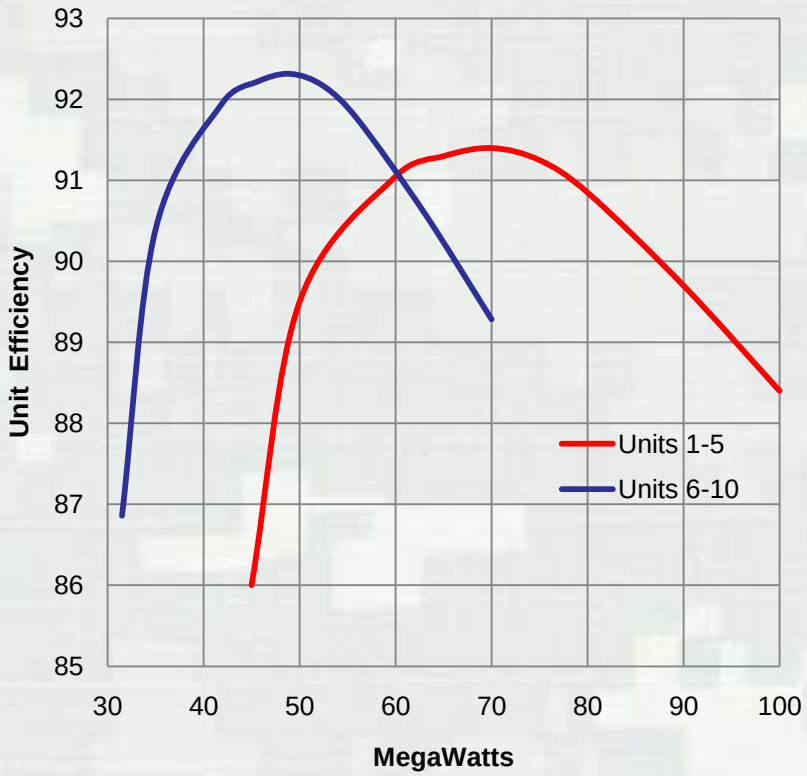

Dispatch 600 MW from the plant shown

How many from Units 1-5, at what power?

How many from Units 6-10, at what power?

Machine Specific Performance

- So Far, have assumed all machines in a family have the same performance
- We know this is not the case
- How much variation is there between ‘identical’ machines?

Plant Optimization Type 2 (T2)

- To make proper unit commitment decisions / gain full benefits from T2, absolute flow measurement needed

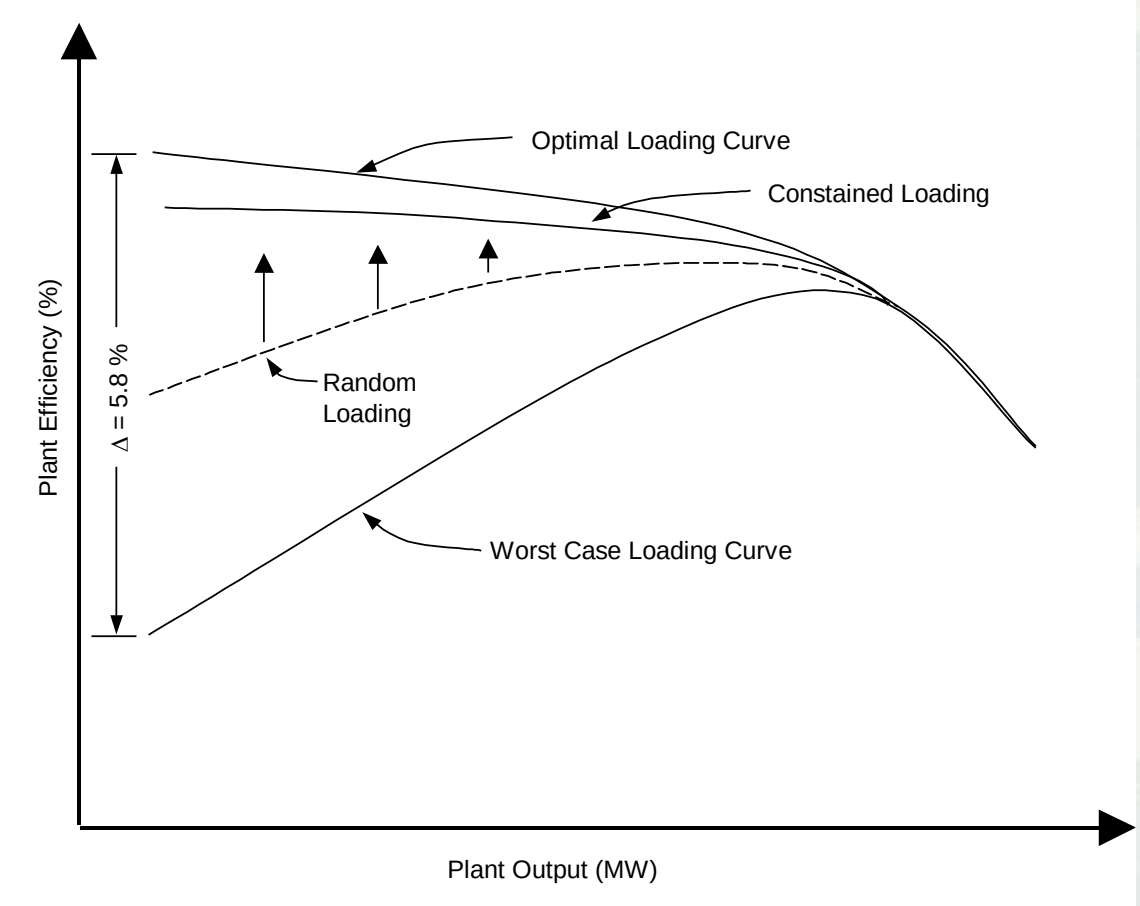

The Dalles Unit 1-14 Case Study

Based on Current Meter Testing

HOT Programs

- TYPE I (Unit) OPTIMIZATION
  - Cam Curve Verification
  - 3-D Cam Controllers
  - Inputs and Telemetry
  - Gate-Blade Optimizer
- TYPE II (Powerhouse) OPTIMIZATION
  - Economic Dispatch
  - Unit Commitment
  - Absolute Flow Measurement
  - Partial Implementation at Chief Joseph

Absolute Flow Measurement – Francis Units

- Chief Joseph
  - 27 Francis units
  - 25 ft diameter penstock
  - Code approved flow measurement (Time of Flight) installed on 2 units (2002)
  - Cost effective methods needed

Absolute Flow Measurements – Kaplan Units

- Comparative Flow Test – Lower Granite Unit 4

ASFM in gate slot

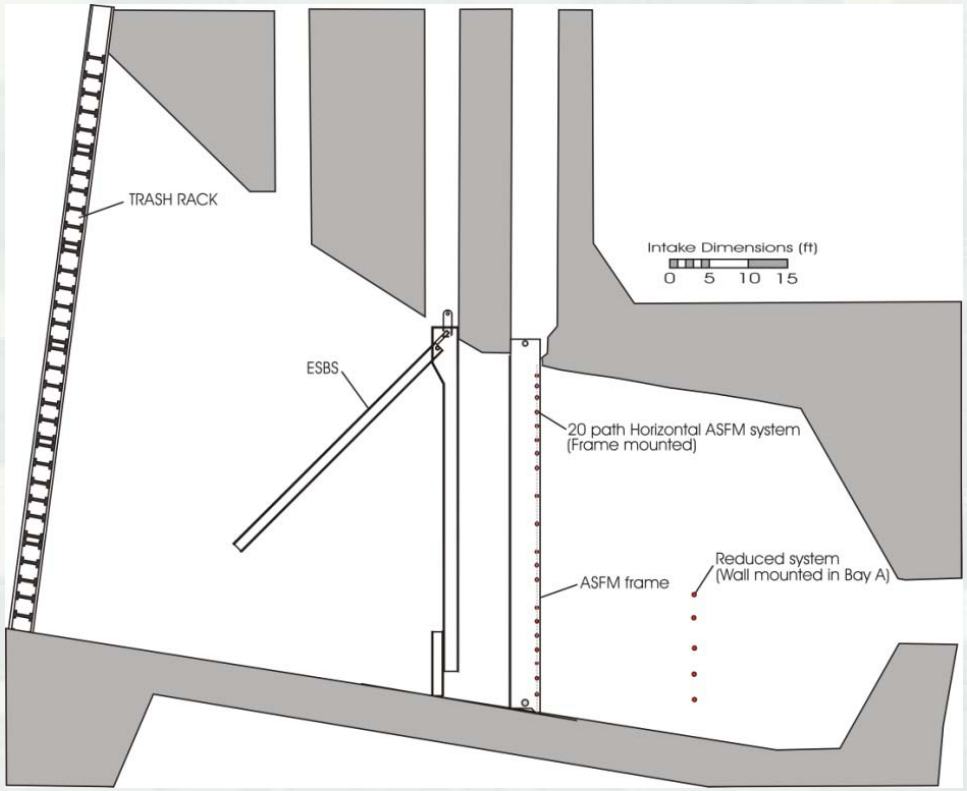

Slide from D. Lemon, ASL

ToF on 3 bays

Absolute Flow Measurement – francis Units

- Comparative flow measurement testing conducted 2008 (Unit 15)

- Acoustic Scintillation Flow Method (ASFM) in intake
- ToF method used as reference flow

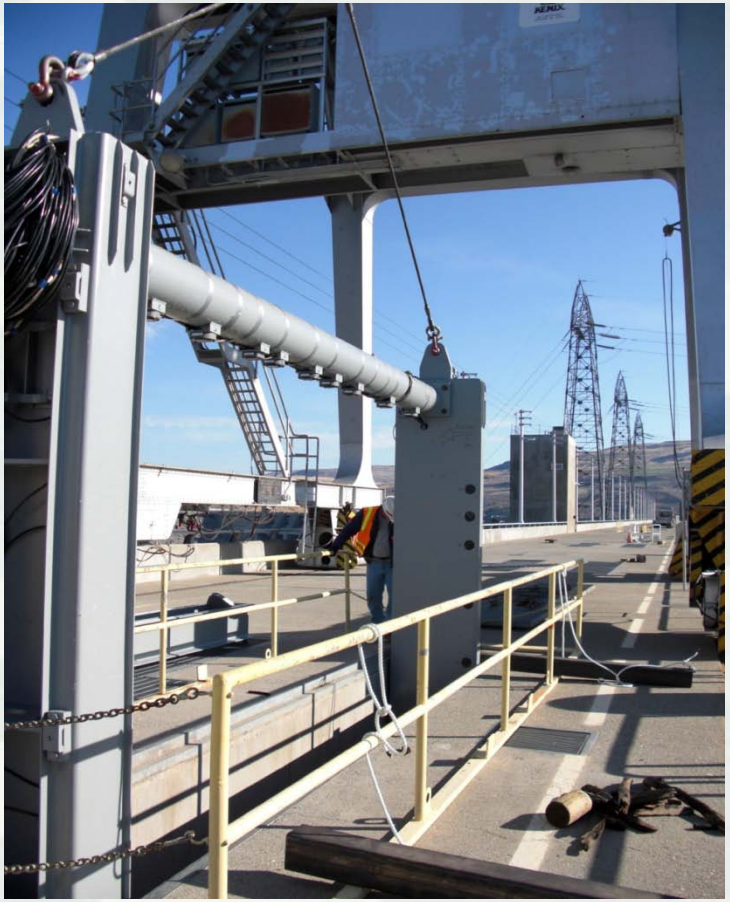

Absolute Flow Measurement – Francis Units

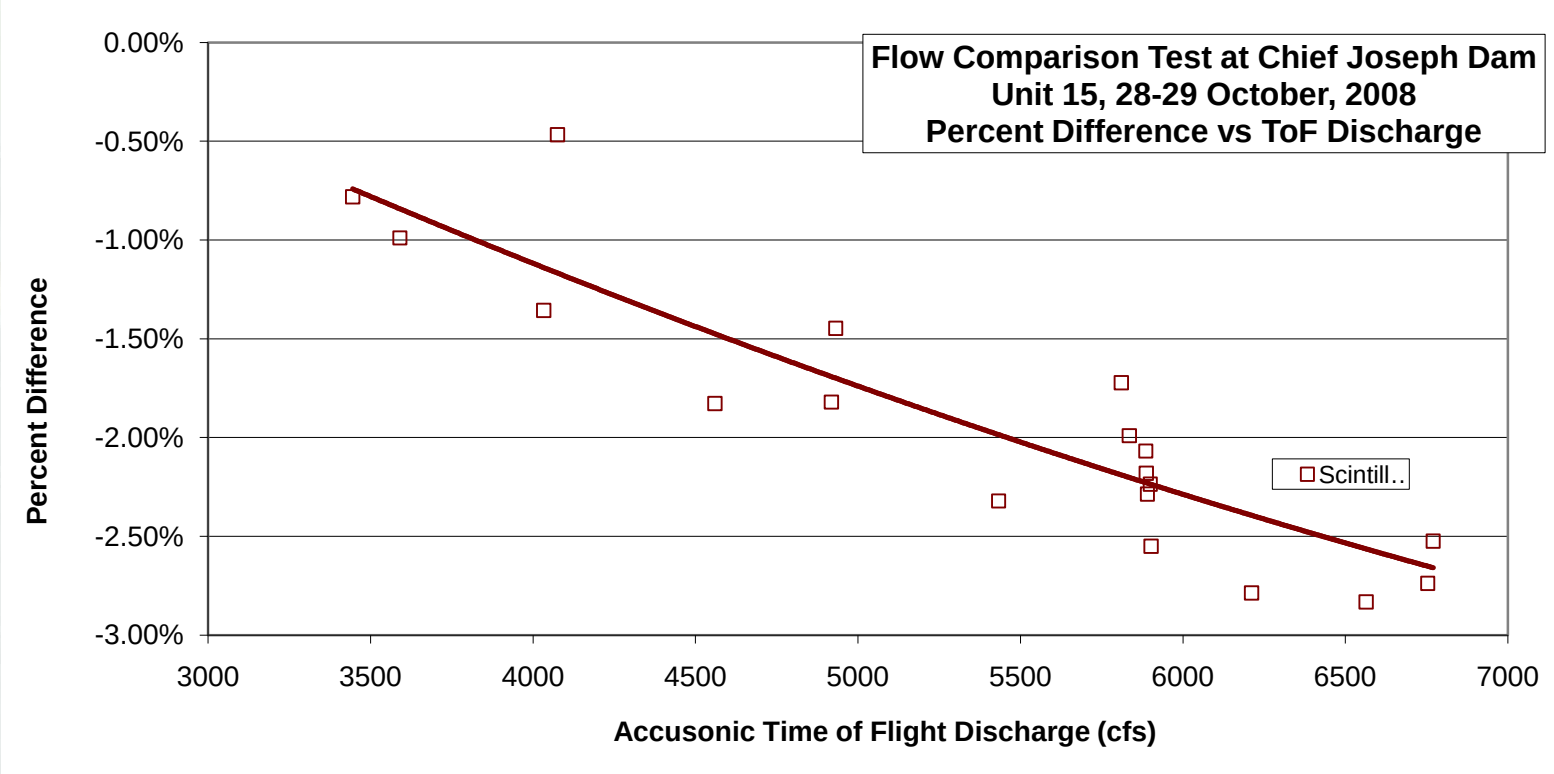

- Retest Unit 15 scheduled Spring 2011
- Along with test of 2nd unit (Unit 11)

Absolute Flow Measurements – Francis Units

- Comparative Flow Test – BC Hydro's Kootenay Canal
  - CEATI HPLIG sponsored testing
    - COE co-sponsor
  - Three methods tested in convergent intake
    - Acoustic Time of Flight
    - Acoustic Scintillation
    - Current Meter
  - Initial results indicate all three methods warrant further consideration for incorporation into test code

Estimated Gains

ACTION	POTENTIAL GAIN/LOSS	GAIN (MW) FINAL EST.
Index Testing & Tuning Units (Kaplan units only)	~ 0.0% - 6% η gain	50.1 aMW
Gate / Blade Optimizer	0.7% - 1.3% η gain	Under Development 29-54 aMW
Economic Dispatch Benefit	~0.2% η gain	22-26 aMW
Unit Commitment Benefit (Correct Number of Units Generating)	~ 0.2% - 0.9% η gain	35-70 aMW
No Feed Forward AGC	~ 0.15% - 0.25% η loss	Benefit included in Unit Commitment
TOTAL BENEFIT		136-200 aMW

Excerpted from Benefits Document, T. Murphy, BPA

QUESTIONS ?